Saengmitr GROUP ISO 9001 : 2015	Products Data Sheet		DELIGHT®
SYMBOL	**TYPE**	**PRODUCT NAME**	**CONTACT NAME / NUMBER**
		TRI-PROOF LIGHT	

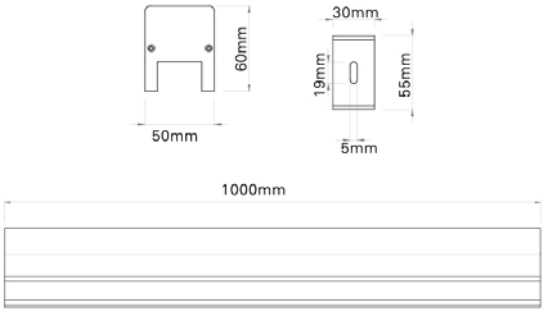

SPECIFICATIONS

LED POWER	: 48x0.25W
POWER FACTOR	: > 0.85
LIFESPAN	: 30,000 HOURS
IP RATING	: IP65
WORK TEMPERATURE	: -30° TO -50°C
COLOR TEMPERATURE	: 2,700K-6,500K

DESCRIPTION

EXTRUDED ALUMINIUM HOUSING WITH HIGH CORROSION RESISTANCE

IMPORTED PC LAMPSHADE

INSTALLATION

STANDARD

TIS. 1955-2551

MODEL	LAMP		DIMENSION (mm.)			REMARK
	WATT	TYPE	W	L	H	
DLED-LL357-B1048	48x0.25W.	LED	50	1000	60	-

Saengmitr GROUP ISO 9001 : 2015	Products Data Sheet		DELIGHT®
SYMBOL	**TYPE**	**PRODUCT NAME**	**CONTACT NAME / NUMBER**
		TRI-PROOF LIGHT	

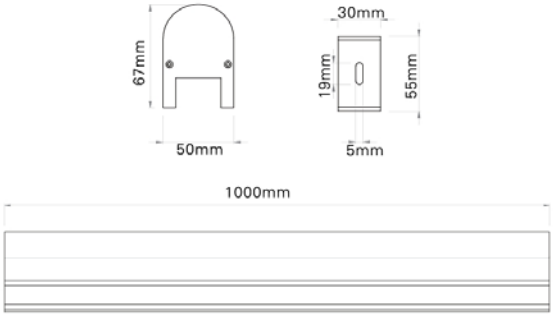

SPECIFICATIONS

LED POWER	: 48x0.25W
POWER FACTOR	: > 0.85
LIFESPAN	: 30,000 HOURS
IP RATING	: IP65
WORK TEMPERATURE	: -30° TO -50°C
COLOR TEMPERATURE	: 2,700K-6,500K

DESCRIPTION

EXTRUDED ALUMINIUM HOUSING WITH HIGH CORROSION RESISTANCE

IMPORTED PC LAMPSHADE

INSTALLATION

STANDARD

TIS. 1955-2551

MODEL	LAMP		DIMENSION (mm.)			REMARK
	WATT	TYPE	W	L	H	
DLED-LL357-B1048	48x0.25W.	LED	50	1000	67	-